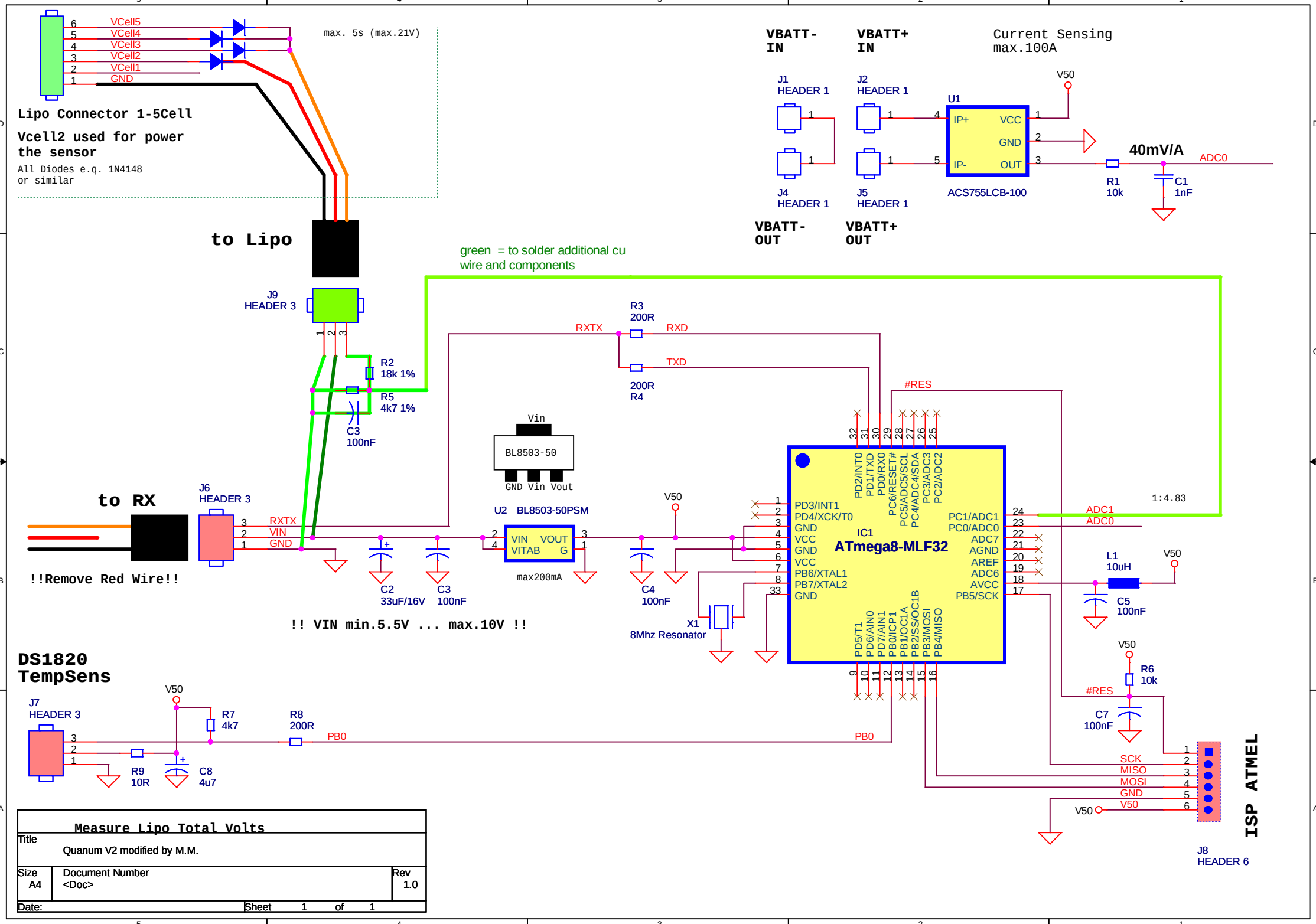
Lipo Connector 1-5Cell
Vcell2 used for power the sensor
All Diodes e.q. 1N4148 or similar
max. 5s (max.21V)
VCell5
VCell4
VCell3
VCell2
VCell1
GND
to Lipo
J9 HEADER 3
green = to solder additional cu wire and components
R2 18k 1%
R5 4k7 1%
C3 100nF
R3 200R
R4 200R
RXTX
RXD
TXD
#RES
Vin
BL8503-50
GND Vin Vout
U2 BL8503-50PSM
VIN VOUT
VITAB G
max200mA
C2 33uF/16V
C3 100nF
C4 100nF
V50
to RX
J6 HEADER 3
RXTX
VIN
GND
!!Remove Red Wire!!
!! VIN min.5.5V ... max.10V !!
X1 8Mhz Resonator
IC1
ATmega8-MLF32
PD3/INT1
PD4/XCK/T0
GND
VCC
GND
VCC
PB6/XTAL1
PB7/XTAL2
GND
PD2/INT0
PD1/TXD
PD0/RX0
PC6/RESET#
PC5/ADC5/SCL
PC4/ADC4/SDA
PC3/ADC3
PC2/ADC2
PC1/ADC1
PC0/ADC0
ADC7
AGND
AREF
ADC6
AVCC
PB5/SCK
PD5/T1
PD6/AIN0
PD7/AIN1
PB0/ICP1
PB1/OC1A
PB2/SS/OC1B
PB3/MOSI
PB4/MISO
ADC1
ADC0
1:4.83
L1 10uH
C5 100nF
R6 10k
C7 100nF
DS1820 TempSens
J7 HEADER 3
R7 4k7
R8 200R
R9 10R
C8 4u7
PB0
ISP ATMEL
SCK
MISO
MOSI
GND
V50
J8 HEADER 6
VBATT- IN
VBATT+ IN
Current Sensing max.100A
J1 HEADER 1
J2 HEADER 1
J4 HEADER 1
J5 HEADER 1
U1
IP+
IP-
VCC
GND
OUT
ACS755LCB-100
40mV/A
R1 10k
C1 1nF
ADC0
VBATT- OUT
VBATT+ OUT
Measure Lipo Total Volts
Title
Quanum V2 modified by M.M.
Size A4
Document Number <Doc>
Rev 1.0
Date:
Sheet 1 of 1